TECHNICAL DRAWING / DESSIN TECHNIQUE

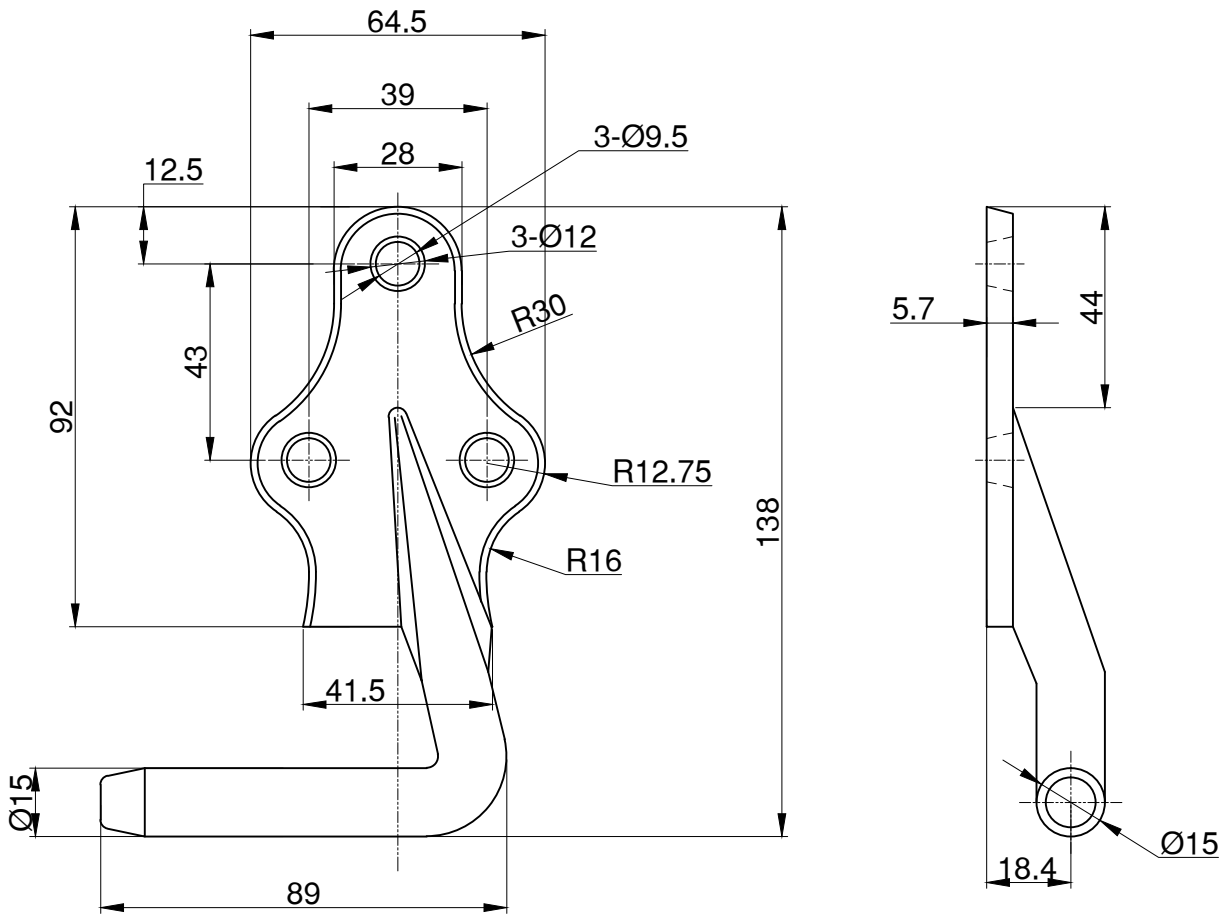

JIMEXS HARDWARE
1 866 447-5656 / INFO@JIMEXS.COM
WWW.JIMEXS-HARDWARE.COM

Crochet à ridelle - coté droit
Rack fastener - righthand

2022-01-25

PROJECTIONS

DIMENSIONS 3"
MATERIAL / MATÉRIEL Iron zinc plated / Fer plaqué zinc