TECHNICAL DRAWING / DESSIN TECHNIQUE

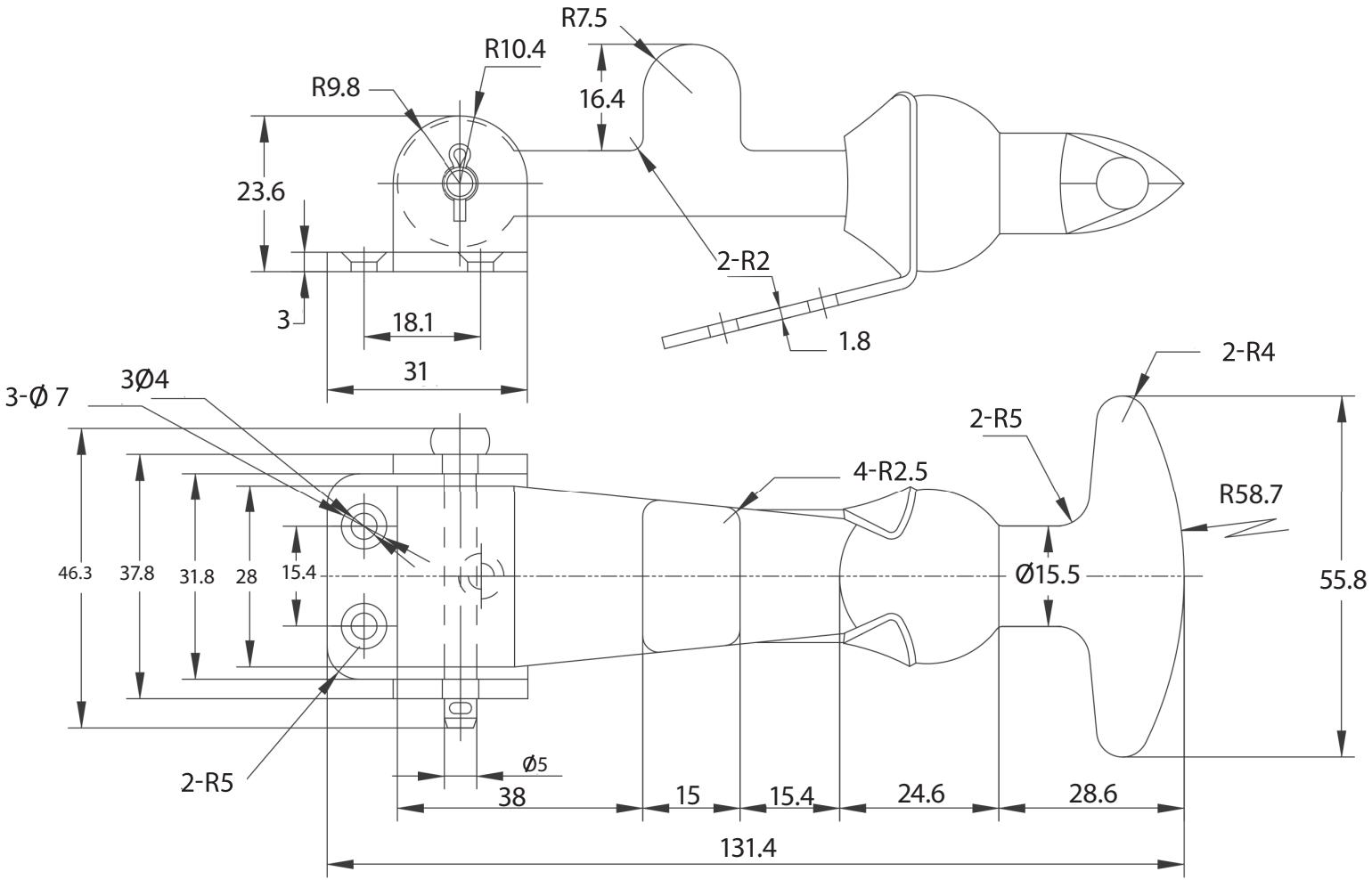

JIMEXS HARDWARE

1 866 447-5656 / INFO@JIMEXS.COM

WWW.JIMEXS-HARDWARE.COM

242-131

Hood fastener
Attache capot

2022-01-06

PROJECTIONS

DIMENSIONS	5"
COLOR /COULEUR	Black/ noir
SPECIFICATIONS / SPÉCIFICATIONS	Rubber, zinc plated steel / Caoutchouc, Acier plaqué zinc