TECHNICAL DRAWING / DESSIN TECHNIQUE

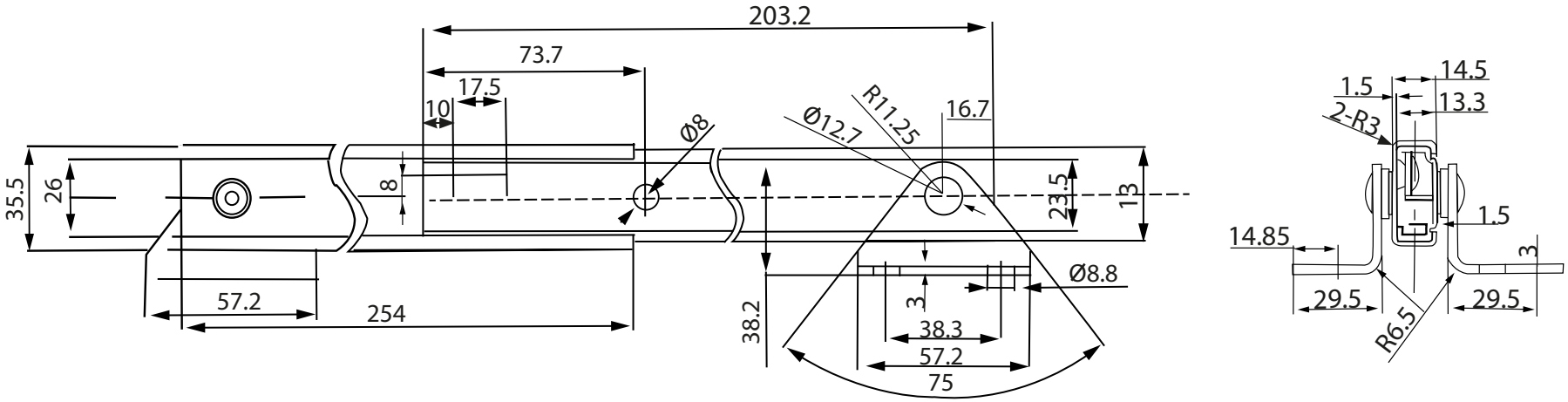

JIMEXS HARDWARE

1 866 447-5656 / INFO@JIMEXS.COM
WWW.JIMEXS-HARDWARE.COM

261-110

Telescopic prop
Support télescopique

2022-01-06

PROJECTIONS

DIMENSIONS	10"
MATERIAL/MATÉRIEL	Steel-Zinc plated Acier plaqué zinc